Appl. Ent. Zool. **15** (4) : 392—399 (1980)

Feeding Habits and Honeydew Components of the Green Rice Leafhopper, *Nephotettix cincticeps* UHLER (Hemiptera : Deltocephalidae)

Shingo ÔYA[1]

Hokuriku National Agricultural Experiment Station, Joetsu, Niigata 943-01, Japan

(Received April 18, 1980)

Nephotettix cincticeps UHLER inserted its stylets mostly into both the vessel and sieve tube of rice plants. The frequency of honeydew excretion and honeydew components were closely related to the sucking sites in the vascular bundle tissues. The honeydews excreted frequently at the rate of 426–930 droplets per hour (or 21.3–46.5 μl/hr) contained no sugar. They seemed to be derived from the xylem sap. On the contrary, the honeydew droplets containing both sugars and amino acids were excreted less frequently, e.g., 18–113 droplets per hour (0.9–5.7 μl/hr), which seemed to be derived from the phloem sap. Percentages of sucking times on the phloem and xylem were about 70 and 30%, respectively. The total amount of honeydews excreted by a single female adult per day on rice seedlings averaged 235 μl at 25°C. Four kinds of sugars and at least two kinds of amino acids were detected in the honeydew. The total sugar and amino acid concentration in the honeydew varied widely from 0.34 to 0.95% as glucose and 0.002% or less as leucine, respectively, since the honeydews deposited consisted of two kinds of droplets originated from the xylem and phloem sap. A single adult female discharged about 1 mg of sugars and less than 4 μg of amino acids per day.

INTRODUCTION

The green rice leafhopper, *Nephotettix cincticeps* UHLER, is an important insect pest of rice in the Hokuriku district, northern Japan, causing damage by sucking the plant sap.

It is well known that some hemipterous insects excrete sweet liquid droplets from their anal referred to as honeydew. AUCLAIR (1963) and TAMAKI (1968) reviewed analytical data on the honeydew of aphids and mealybugs, which made much information available on their feeding habits, nutritional requirements, and causes of sucking damage. SŌGAWA (1970a, b) reported the feeding habits of the brown planthopper, *Nilaparvata lugens* STÅL, which causes serious damage to rice. Insertion of stylets and probing frequency of the green rice leafhopper have been elucidated histologically (NAITO and MASAKI, 1967a, b).

An aim of the present studies is to clarify behavior of honeydew excretion, the amount and component of honeydew, and sucking sites in plant tissues in the green

[1] Present address: Kyushu National Agricultural Experiment Station, Chikugo, Fukuoka 833, Japan.

rice leafhopper in relation to the sucking damage to rice plants.

MATERIALS AND METHODS

Insects. Insects used were reared on rice seedlings in a constant temperature cabinet at 25°C, 16–8 hr light-dark conditions. Adult females were used at preovipositional stage in all experiments.

Excretive frequency and chemical component of honeydew. An apparatus for collecting the honeydew droplets was devised (Fig. 1A). A single insect per seedling was introduced into the cage for 6 hr at 25°C. The filter paper under the cage was continuously moved at a speed of 5 mm per minute. Two kinds of filter papers were used. The frequency of honeydew excretion was observed by counting the droplets on Water Blue Filter Paper. The filter paper is colored blue when the droplets are deposited on it. The relative volume of honeydew droplets was estimated by comparing the size of their spots with that of known amounts of 2.5% sucrose solution on the same filter paper.

The chemical components of each droplet were determined using another filter paper: Toyo Filter Paper No. 51. One percent aniline hydrochloride in ethanol and 0.1% ninhydrin in acetone solutions were used to detect sugars and amino acids, respectively (Sōgawa, 1970b). However, many droplets could not be detected with either reagent. Therefore, the filter paper was first irradiated with U. V. rays to detect all the honeydew droplets deposited.

Amount of honeydew excretion at different temperatures. A device used for estimating the amount of honeydew excretion is shown in Fig. 1B. Four insects per 4 seedlings were introduced into the cage for 24 hr at 20, 25 and 30°C. As a control, other sets without insects were prepared at each temperature. Honeydew droplets were collected in water (5 m*l*). The amount of honeydew was estimated by weighing water in the plastic vessel correcting for the mean weight loss of control vessels.

Analyses of honeydew in quality and quantity. An apparatus for collecting the honeydew droplets from leaf blades was devised (Fig. 1C). Five insects were introduced into a cage. The honeydew droplets deposited on the plate were collected with a capillary pipette and used for qualitative analyses.

A device shown in Fig. 1D was used to collect the honeydew for estimating the total amount of sugars and amino acids discharged. Six insects were introduced into a cage for 24 hr under outdoor conditions in late September. The honeydew absorbed in the filter paper was extracted with distilled water immediately after collection. In these experiments, the concentrations of sugars and free amino acids were determined colorimetically with anthron-sulfuric acid and nynhydrin-stannous chloride reagents, respectively (Sōgawa, 1970a).

Sugars in the honeydew were analysed by paper-chromatography with *n*-butanol–acetic acid–water (4:1:2 V/V). Amino acids were analysed by two-dimensional thin layer chromatography with silica-gel G containing 5% corn starch. As solvent systems, phenol–0.1% ammonia water (4:1 V/V) and *n*-butanol–acetic acid–water (4:1:2 V/V) were used for the first and the second development, respectively. Sugars and amino acids were detected with reagents as mentioned before.

Termination sites of stylet sheaths in plant tissues. The frequency of stylet insertion for one day was observed by counting feeding marks left on leaf blades. The feeding

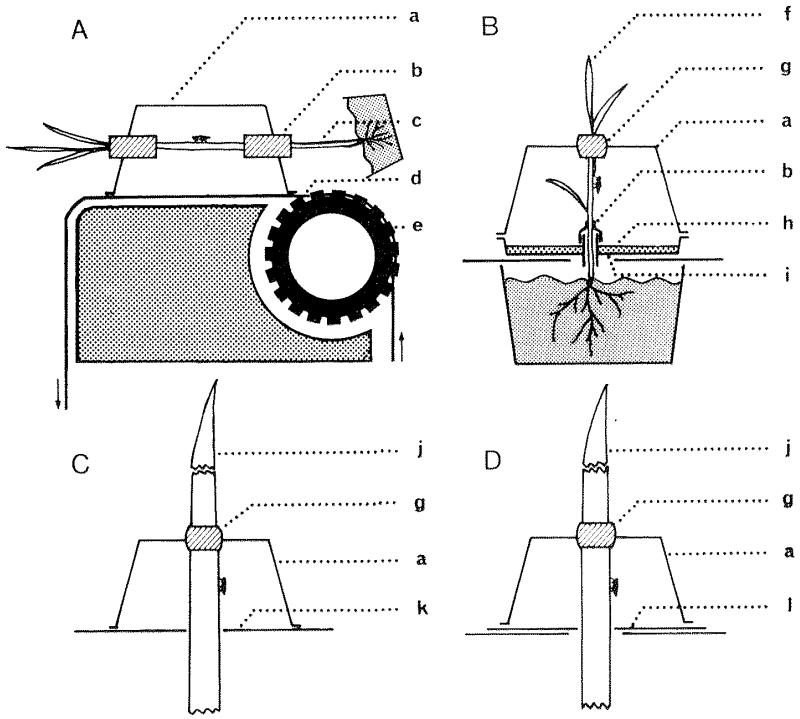

Fig. 1. Apparatus for collecting honeydew. a: translucent plastic cage of 5.5 cm in diameter and 3.5 cm in height, b: aluminum foil, c: rice seedling at 3.5-leaf stage, d: filter paper moving at a speed of 5 mm/min, e: instrument for moving filter paper, f: rice seedling at 2.5-leaf stage, g: absorbent cotton plug, h: water (5 m*l*), i: plastic vessel, j: leaf blade at tillering stage, k: plastic plate, l: filter paper.

marks were stained with erythrosin and counted under the microscope (NAITO, 1964). The termination sites of stylet sheaths, which suggest the sucking sites, were observed histologically. The leaf blades infested by four insects were fixed in acetic acid–alcohol (1:3 V/V) and sectioned in 10 μm thickness following an ordinary paraffin section procedure. The sections were stained with both eosin and Delafield's haematoxylin and examined under the microscope.

RESULTS

Excretive frequency and chemical component of honeydew

The leafhopper raises its abdomen slightly just before excreting honeydew droplets, then shoots off a droplet, and rubs its abdomen and anus with hind legs every four or five droplets. The honeydew droplets are colorless and translucent. Honeydew excretion by 30 insects were observed individually.

The patterns of honeydew excretion were classified into two types, Types A and B, based on their different frequencies (Fig. 2). In Type A, the insects excreted the droplets frequently, 7.1–15.5 droplets per minute (Table 1), so that the droplets deposited on the filter paper drew a series of straight line. In Type B, excretion was not so frequent, 18–113 droplets per hour, varying considerably among individual insects. The droplets of Type A contained no sugars and almost no amino acids,

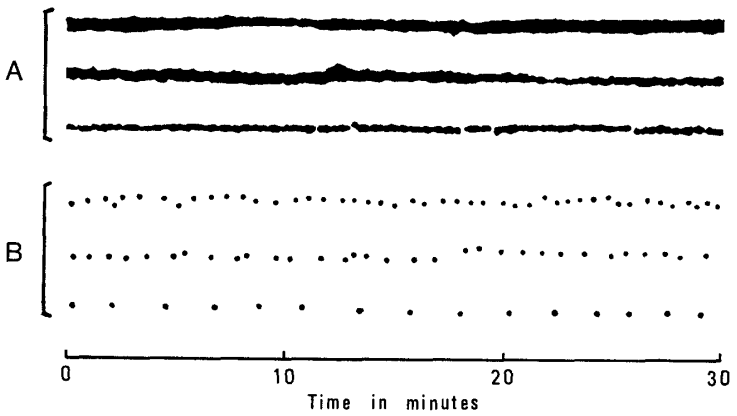

Fig. 2. Types of patterns of honeydew droplets deposited by *N. cincticeps* on Water Blue Filter Paper moving at a speed of 5 mm/min.

Table 1. Frequency of Honeydew Excretion and Component of Honeydew Droplets of *N. cincticeps*

Honeydew droplet (Type in Fig. 2)	Frequency of honeydew excretion (droplets/hr)		Amount of honeydew excretion (μl/hr)		Component of honeydew[a]	
	Range	Mean	Range	Mean	Sugar	Amino acid
A	426–930	481.8	21.3–46.5	24.1	−	±
B	18–113	72.8	0.9– 5.7	3.6	+	+

[a] + : present, ± : little or not present, − : not present.

but these of Type B contained both sugars and amino acids. These results indicated that the leafhopper excreted two different kinds of honeydew droplets, and the honeydew components in quality were closely related to the frequency of honeydew excretion.

The diameter of droplet spots on the filter paper ranged from 1.1 to 1.5 mm, and the mean volume of droplets was 0.05 μl (ranging 0.03–0.07 μl). Therefore, the rate of honeydew excretion in Type A was 6.7 times as much as that in Type B (Table 1).

Fig. 3 shows the duration of excretion of the two kinds of honeydew droplets by individual insects for 6 hr. Some insects excreted mostly either the sugar-free or sugar-containing droplets, while many others excreted both alternately. The excreting pattern differed significantly among individual insects. The proportion of the excreting times of the two kinds of honeydews was 71.2% for sugar-containing droplets and 28.8% for sugar-free ones. According to Table 1, a single adult female was estimated to excrete 192.9 μl of honeydew per day on an average.

Amount of honeydew excretion at different temperatures

The total amounts of daily excretion by an insect were 137.0±47.3 (mean±95% CL), 235.3±75.1, and 363.7±40.4 μl at 20, 25 and 30 °C, respectively.

Sugars and amino acids in honeydew

The quantitative colorimetric assay showed that the honeydew contained 0.34

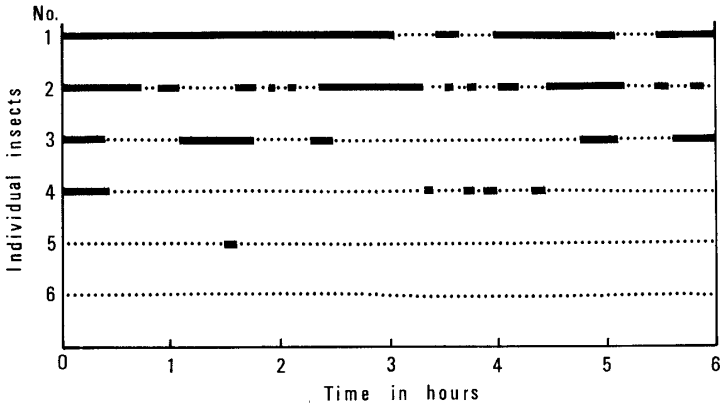

Fig. 3. Duration of excreting two kinds of honeydew droplets by individual adult females for 6 hr. ——: sugar-free droplets, ·····: sugar-containing droplets.

to 0.95% (mean 0.74%) of sugars as glucose and less than 0.002% of amino acids as leucine. It is suggested that the differential concentration of both sugars and amino acids in the honeydew was due to the different proportions of the two kinds of droplets derived from the phloem and xylem sap. A single insect discharged 436.5 to 1209.2 μg (mean 945.5 μg) of sugars as glucose and less than 4 μg of amino acids as leucine for one day. To estimate the total amount of honeydew excreted by an insect for one day, the amount of discharged sugars was divided by the concentration of sugars in the honeydew. Thus, the total amount of honeydew excretion by a single adult female was calculated to be 59.0 to 163.4 μl (mean 127.8 μl) per day.

Fig. 4 shows four kinds of sugars detected in the honeydew, i.e., fructose, glucose, sucrose, and one unidentified substance with smallest Rf-value. Only two kinds of amino acids, aspartic acid and glutamic acid, were detected in the honeydew when the collected honeydew was condensed. Concentrations of other amino acids were usually too low to be detected by thin layer chromatography.

Termination sites of stylet sheaths in plant tissues

A single insect produced 51.5 feeding marks (ranging 41.0–65.0) for one day. When the stylets are inserted into the plant tissues, the salivary sheath is formed with saliva secreted from the tip of stylets. Stylets were usually inserted through the epidermal cells alongside the leaf veins. Salivary sheaths left in the plant tissues showed a single or branched continuous tubular structure curving to the right or left and usually extending as long as 120–150 μm (Fig. 5).

As Table 2 shows, 98% of the sheaths were found to have at least one branch entering into the vascular bundles. The remainder were terminated in the mesophyll or parenchyma in the leaf tissues. In the large vascular bundle, 60% of stylet sheaths were terminated in the vessel and 30% in the sieve tube. In the small vascular bundle, the stylet sheaths were terminated more frequently in the sieve tube than in the vessel, but about one-third of the stylet sheaths was in other tissues such as the mestome sheath and the parenchymatous bundle sheath.

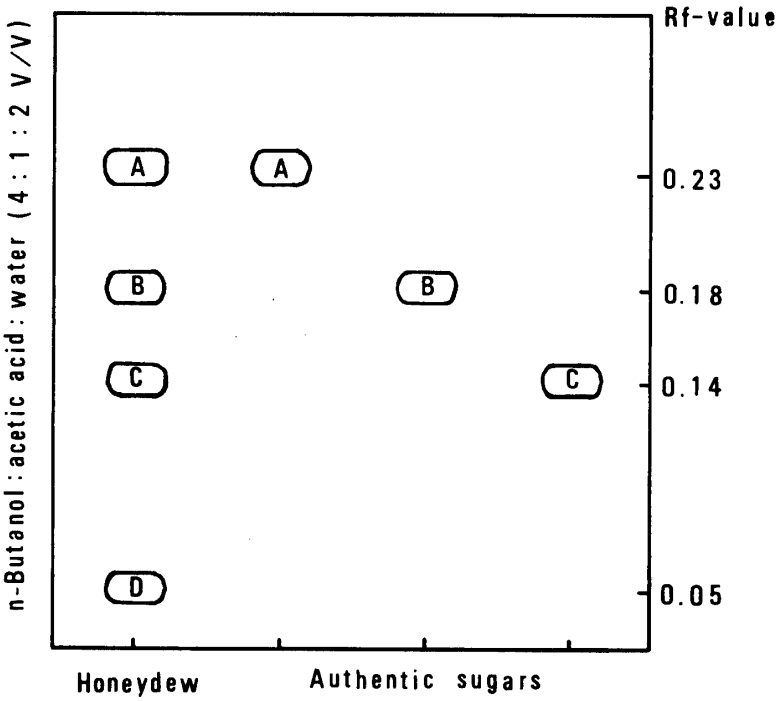

Fig. 4. Paper chromatogram of sugars in the honeydew. A: fructose, B: glucose, C: sucrose, D: unidentifiable compound.

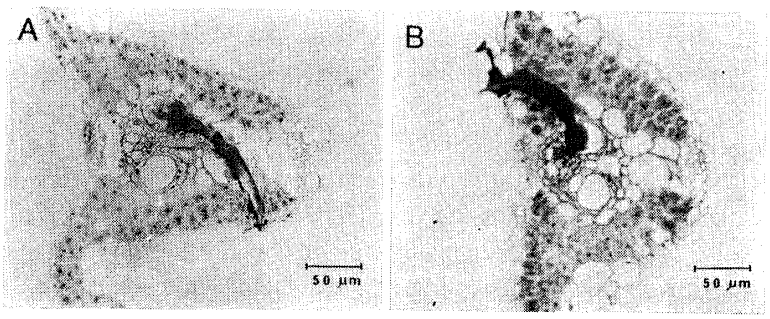

Fig. 5. Photographs of stylet sheaths of *N. cincticeps* in the large vascular bundle. A: inserted into the vessel, B: inserted into both the sieve tube and the vessel.

DISCUSSION

From the histological observation of stylet sheaths deposited in plant tissues, it seems likely that the green rice leafhopper is a vascular bundle feeder as has been mentioned by NAITO and MASAKI (1967a). Some other rice planthoppers and leafhoppers are also vascular bundle feeders(SŌGAWA, 1970a; NODA et al., 1973; SONKU and SAKURAI, 1973). The vascular bundles of rice plants are functionally divided into two parts: namely the phloem and the xylem. The honeydew of the phloem feeding aphids is usually rich in sucrose (AUCLAIR, 1963). ESAU (1961) reported that xylem feeders discharged a large amount of diluted excreta, while phloem feeders excreted a relatively small amount of honeydew being rich in sugars. The present experiments dem-

Table 2. Frequency Distribution of Termination Sites of Stylet Sheaths in Leaf Blade by *N. cincticeps*

Plant tissue	No. of sheaths	(%)	Vascular bundle tissue	No. of sheaths	(%)
Large vascular bundle	181	(40.4)	Vessel	166	(59.3)
			Sieve tube	94	(33.6)
			Others[a]	20	(7.1)
			Total[b]	280	(100)
Small vascular bundle	257	(57.4)	Vessel	81	(25.5)
			Sieve tube	122	(38.4)
			Others[a]	115	(36.1)
			Total[b]	318	(100)
Parenchymatous tissue	10	(2.2)			
Total	448	(100)			

[a] Others indicate the parenchymatous bundle sheath and mestome sheath.
[b] One stylet sheath sometimes arrives at 2 or 3 vascular bundle tissues, so the total no. of stylet sheaths in vascular bundle tissues is larger than that of plant tissues.

onstrated that the green rice leafhopper excreted the two kinds of honeydews during sucking, which were clearly distinctive in their chemical quality. The honeydew excreted very frequently did not contain sugars at all, and also the content of amino acids was very low. Excretion of these honeydews seems to be responsible for the xylem feeding. On the other hand, the honeydew droplets containing both sugars and amino acids were excreted very slowly and seem to originate from the phloem sap. Based on this evidence, it is reasonable to conclude that the green rice leafhopper alternately sucks the xylem and phloem sap. The frequency of honeydew excretion differs distinctly between this leafhopper and *N. lugens*.

The total sugar and amino acid concentration in the honeydew of this leafhopper is lower than that of *N. lugens* (Sōgawa, 1970b). Noda et al. (1973) have also mentioned that the total amino acid concentration in the honeydew excreted by the green rice leafhopper was lower than that of other plant- and leafhoppers fed on rice. These results indicate that the green rice leafhopper sucks the xylem sap much more than the phloem sap, although the duration of ingesting the xylem sap is shorter than that of the phloem sap.

Considering the kinds of sugars detected in the honeydew, three of them agree with photosynthate substances translocating in rice plants (Yoshida and Miyamatsu, 1968) and one unidentified sugar may be a metabolic waste product. Mittler (1958) reported that the same kinds of amino acids could be detected both in the honeydew of the large willow aphid, *Tuberolachnus salignus* Gmelin, and in the phloem sap on which the insect fed. Noda et al. (1973) detected 14 kinds of amino acids in the honeydew of this leafhopper by an automatic amino acid analyser, but their concentrations were usually very low. The detection of amino acids in the honeydew by thin layer chromatography was very difficult due to low concentration.

The total amount of daily excretion was estimated by three different methods in the present experiments, but it was variable depending on temperature, the stage of rice plants, and the differential sucking duration on the phloem or xylem, even when

the same plants were offered as food. The amount was, however, much larger as compared with *N. lugens* (SŌGAWA, 1970a). A single adult female discharged about 1 mg of sugars and less than 4 μg of amino acids from rice plants by sucking for one day. Yield losses caused by scking plant sap after the heading stage of rice are due to the reduction in the percentage of ripened grains and 1000-grain weight (ÔYA, unpublished). These feeding habits and vigorous honeydew excretion would affect the physiological conditions of rice plants and cause significant damage to rice plants.

ACKNOWLEDGEMENTS

The author wishes to express his thanks to Mr. A. SATO, Hokuriku National Agricultural Experiment Station, for his valuable suggestions during the course of the study. A part of this work was conducted at the Nagoya University in 1971 as a visiting researcher. Thanks are also due to Emeritus Professor K. IYATOMI, Prof. T. SAITO, and Dr. K. SŌGAWA for their kind advice in this study. He is grateful to Dr. A. NAITO, National Grassland Research Institute, for his helpful suggestions on histological observation of stylet sheath and to Dr. J. HIRAO, Kyushu National Agricultural Experiment Station, for his advice and critical reading of the manuscript.

REFERENCES

AUCLAIR, J. L. (1963) Aphid feeding and nutrition. *Ann. Rev. Ent.* **8** : 439–490.

ESAU, K. (1961) *Plants, Viruses,* and *Insects.* Cambridge: Harvard University Press, 110 p.

MITTLER, T. E. (1958) Studies on the feeding and nutrition of *Tuberolachnus salignus* (GMELIN) (Homoptera, Aphididae). II. The nitrogen and sugar composition of ingested phloem sap and excreted honeydew. *J. exp. Biol.* **35** : 74–84.

NAITO, A. (1964) Methods of detecting feeding marks of plant- and leaf-hoppers. *Plant Protection* (Tokyo) **18** : 482–484 (in Japanese).

NAITO, A. and J. MASAKI (1967a) Studies on the feeding behavior of green rice leafhopper, *Nephotettix cincticeps* UHLER. I. Insertion of the stylets into host plant. *Jap. J. appl. Ent. Zool.* **11** : 50–56 (in Japanese with an English summary).

NAITO, A. and J. MASAKI (1967b) Studies on the feeding behavior of green rice leafhopper, *Nephotettix cincticeps* UHLER. II. Probing frequency of the adult leafhopper. *Jap. J. appl. Ent. Zool.* **11** : 150–156 (in Japanese with an English summary).

NODA, H., K. SŌGAWA and T. SAITO (1973) Amino acids in honeydews of the rice planthoppers and leafhoppers (Homoptera: Delphacidae, Deltocephalidae). *Appl. Ent. Zool.* **8** : 191–197.

SŌGAWA, K. (1970a) Studies on feeding habits of the brown planthopper. I. Effects of nitrogen-deficiency of host plant on insect feeding. *Jap. J. appl. Ent. Zool.* **14** : 101–106 (in Japanese with an English summary).

SŌGAWA, K. (1970b) Studies on feeding habits of the brown planthopper. II. Honeydew excretion. *Jap. J. appl. Ent. Zool.* **14** : 134–139 (in Japanese with an English summary).

SONKU, Y. and Y. SAKURAI (1973) Transmission of rice stripe virus by *Laodelphax striatellus* FALLÉN. I. Mode of stylet insertion and virus secretion. *Ann. Phytopath. Soc. Japan* **39** : 53–60 (in Japanese with an English summary).

TAMAKI, Y. (1968) Chemical composition of honeydew excreted or secreted by aphids and coccids. *Biological Science* (Tokyo) **20** : 17–25 (in Japanese).

YOSHIDA, T. and K. MIYAMATSU (1968) Translocation and metabolism of photosynthate in paddy rice roots. *J. Sci. Soil Manure, Japan* **39** : 228–232 (in Japanese).